2015-2016 APPLICATION FOR RESORT TAX FUNDS

As required by law, an applicant must be a legal entity formed under the laws of the State of Montana. The applicant must be "an entity" that is capable of both "legally and practically" carrying out the purpose of the appropriation and located within the resort area district. The applicant must be a governmental unit, corporation or limited partnership with the capability of being legally bound by the Appropriation Agreement.

The purpose of the appropriation request must be within the purposes of the District's Legal Ordinance NO. 98-01 (posted online: www.ResortTax.org), as amended, and must benefit the community at large, and not a single person, organization or corporation.

INSTRUCTIONS:

- For new requests and rollover requests, use the forms provided. Do not use your own format; do not change the applications.
- The application must be signed by the governing Board Chair or Officer of the applicant organization. If funded, the governing Board Chair or Officer must also sign the Contract.
- The applicant must appoint an Applicant Representative whom the applicant's governing Board Chair or Officer deems capable of representing the application during the Appropriation process.
- Please provide seven (7) complete copies of each application. Provide concise answers on two-sided, white, 3-hole punched, 8½ x 11 paper. Staple each copy in the upper left corner. Do not submit copies in folders, binders, etc. Do not include extra materials. In addition, provide a PDF copy of the signed application to Info@ResortTax.org.
- Incomplete applications may not be considered for funding. It is the applicant's responsibility to provide all information requested in the proper format.
- Questions? Contact: Whitney Brunner, Administrative Officer (406) 995-3234, Info@ResortTax.org

APPLICATION DEADLINE: Monday, April 6, 2015 3:00 p.m.

- Applications must be received (not postmarked) by the deadline or they will not be considered.
- Applications will be date and time stamped when received at the resort tax office. Applications will be addressed at the Question and Answer Session in the order in which they were received at the resort tax office.

Mail applications to:
Big Sky Resort Area District
PO Box 160661
Big Sky, MT 59716

Drop off applications at:
11 Lone Peak Drive, Suite 204
Town Center, Big Sky, MT

QUESTION & ANSWER: Wednesday, May 13, 2015 1:00 p.m.

APPROPRIATIONS MEETING: Wednesday, June 10, 2015 1:00 p.m.

- To be held in the Big Sky Chapel Community Room, 510 Little Coyote Road, Big Sky, MT.
- The Applicant Representative must be present to answer questions regarding the application. Applicants that do not have a representative present at the meetings may not be considered for funding.
- The public is welcome at all meetings and will be given the opportunity to comment on the applications.

2015-2016 APPLICATION FOR RESORT TAX FUNDS

PLEASE NOTE:

Permitting: All applicants are responsible for securing any necessary permits for proposed projects.

Bidding Policy: Resort Tax Board policy states that project line items exceeding $50,000 are required to get two bids. If the lowest bidder is not accepted, the entity is to provide a written explanation to the Resort Tax Board.

Alcohol Policy: It is the Big Sky Resort Area District Board's policy to not use resort tax funds to provide for the consumption of alcohol. This policy is applicable for active board members and employees of Big Sky Resort Area District and its appropriation funded entities.

Appropriation funded entities are responsible for adherence to this policy and failure to do so may result in the entity being required to return resort tax funds previously paid or termination of unspent resort tax funds.

RESORTTAX
— BUILDING BIG SKY SINCE 1992 —

2015-2016 APPLICATION FOR RESORT TAX FUNDS

Applicant's Official Name: Gallatin County Emergency Management

Project Name: Emergency Variable Message Board

Project Start Date: 7/1/2015 **Project Completion Date:** 10/1/2015

Representative: Patrick Lonergan

Address: 34 North Rouse, Bozeman, MT

Telephone: (406) 582-2350 **Email:** plonergan@bozeman.net

Total Funds Requested $ 20,000.00

State your estimated payment request schedule for the coming year; amounts should total funds requested. Please enter dollar amounts.

	July '15	Aug '15	Sep '15	Oct '15	Nov '15	Dec '15
Payment Request $			20,000.00			
	Jan '16	**Feb '16**	**Mar '16**	**Apr '16**	**May '16**	**Jun '16**
Payment Request $						

I certify that the application and its attachments are correct to the best of my knowledge.

Signature

Chairman
Title (Board Chair or Governing Officer)

Steve White
Printed Name

3-31-15
Date

2015-2016 APPLICATION FOR RESORT TAX FUNDS

1) Provide a description of the entity and the Mission Statement.
State the entity's tax status/legal identity and when it was initiated.
What is the personnel makeup of your office; specifically how many are employees, how many are contractors and what are their duties? What is the full time equivalent (FTE) of each: ¼ , ½, ¾ or full time?
Unless previously provided to the resort tax office, please include a copy of the Articles of Incorporation.
(200 words max)

Gallatin County Emergency Management is a department of Gallatin County, a political subdivision on the State of Montana. Gallatin County Emergency Management's Mission Statement is:

"… to minimize loss of life and personal injury, damage to property and the environment from disasters, both natural and manmade. We will diligently work to enhance our all-hazard emergency management program. We strive to accomplish this through a continuing program of outreach, coordination, planning, training, and exercising for "all hazards" and for all four phases of emergency management – mitigation, preparedness, response, and recovery."

The Emergency Management Department is administered through the Bozeman Fire Department via a contract for services. Through this contract the Fire Department provides the staff for day to day functions and coverage of the duty officer program. The majority of one Fire Department's employee time is focused on this program and supported by volunteers from a variety of agencies.

More information is available at ReadyGallatin.com.

2015-2016 APPLICATION FOR RESORT TAX FUNDS

2) Provide a complete description of the project(s). Include the project(s) purpose, goals and objectives. For each project provide measurable objectives, i.e. how you will do something and in what timeframe. The information provided here should be specific regarding what the entity is requesting to be funded by resort tax. If requesting funds for Operations, identify the categories and assign a dollar amount (salaries, software, etc.) If permits are required, please specify what permits are required and what projects they apply to. Please be succinct.

Gallatin County Emergency Management is requesting funding for the purchase and placement of a portable variable message board in Big Sky. Gallatin County procured portable highway advisory radios over a decade ago for providing emergency messaging to affected areas during incidents. These radio transmitters have started developing issues and have become challenging to repair due to changes in technology. We have determined that it is more effective, both financially and in usefulness in the community, to replace the radio transmitter in Big Sky with a new variable message board. Modern variable message boards will provide us the ability to deliver a message to the community in numerous situations without the need of an am radio to listen to the message.

This message board would be owned by Gallatin County Emergency Management and housed by the Big Sky Fire Department. The message board will be available for use by any public safety agency for emergency situations such as extended road closures or wildfire updates and community events such as parking information or community announcements. Our primary objective is to have a tool for delivering emergency messages to the community and by making this unit available for other events we ensure the unit is utilized frequently and in working order. This also provides an additional value add to the community when the message board isn't needed for an emergency event.

This project is a turnkey project that would simply require the variable message board to be ordered from the vendor, configuration of the unit by the vendor, and delivery. Once onsite a partial day training session would be held on the message board and it would be operational in the community.

We have targeted September 2015 as the implementation month to avoid crossing fiscal years, summer wildfires, and to allow time for competitive quotations from vendors.

3) Is the project within the resort tax district? (25 words max)

Yes. The message board will be located and utilized in the Gallatin and Madison County areas of the Big Sky Community.

Please note: Not every project will fulfill questions #4 through #8. Applications will not be rated on the ability to fulfill multiple questions.

Does the entity and/or project…

4) Benefit the community at large including residents, visitors and tax collectors/the business community? (50 words max)

Yes, this project is aimed at communicating with anyone in the affected area, whether a local or visitor. We recognize that news travels fast, however there are many Big Sky areas with marginal communication and visitors often don't have the same connections. This will help provide messaging to anyone affected.

5) Promote tourism and development, help make Big Sky a world class resort community and increase resort tax revenue? (50 words max)

Indirectly, the ability to utilize this for community events will support smooth and clear communications with attendees without needing to rent a message board.

6) Support or improve critical infrastructure, public health, safety and/or welfare in the world class community? (50 words max)

Yes, the primary objective is to communicate with those in the community during an emergency incident. The better emergency officials can communicate, the safer the community will be.

7) Involve collaboration among entities in the community to meet common goals? (100 words max)

This is a collaborative project with Gallatin County owning the unit, Big Sky Fire housing and deploying it, and it being utilized when it's needed in the community.

8) Fill a community need not currently or adequately being satisfied? (50 words max)

This is a replacement for an outdated and failing asset already in the community. We are confident this tool will be more effective and beneficial in communicating with the community than the current radio transmitter.

2015-2016 APPLICATION FOR RESORT TAX FUNDS

Provide the following financial documents:

9) Copy of the entity's complete operating budget for the period 07/01/15 through 06/30/16.

If your fiscal year does not coincide with this time period, please provide complete budgets for the entity's fiscal year that covers the aforementioned time period. For example, if the entity's fiscal year corresponds with a calendar year, provide two budgets 1) 01/01/2015 through 12/31/2015 and 2) 01/01/2016 through 12/31/2016.

FY16 will not be known until June 2015. Should be similar to FY15.

FY14 and FY15 YTD are attached.

10) Organization's Profit and Loss Report, Budget vs. Actual Report and Balance Sheet from your previous completed fiscal year.

Attached

11) Organization's Profit and Loss Report, Budget vs. Actual Report and Balance Sheet from your current fiscal year to date.

Attached

12) For applicants with mill levy authority please provide the following:

a. A map of your district's boundaries

Gallatin County Emergency Management covers all of Gallatin County including incorporated cities. As a practical matter, while not technically in our area of responsibility, we also provide support to the Madison County portion of Big Sky.

b. The current taxable value of your district

$9,834,392,320.00

c. If applicable, the current mill levy rate

Approx. .225 mills from Gallatin County Public Safety Mill Levy and .225 mills from FEMA.

d. **Using the information above, provide a detailed budgetary breakdown of the potential tax burden per $100,000 value, for property owners within your district if mill levy authority would be used to fund this project rather than resort tax funds**.

Our taxing authority does not cover the entire service area of the Big Sky Community.

RESORTTAX
— BUILDING BIG SKY SINCE 1992 —

2015-2016 APPLICATION FOR RESORT TAX FUNDS

TOTAL ORGANIZATIONAL BUDGET

(to include all organization projects and programs; not only those requesting funding for in this cycle)

Total budget for the year the entity is requesting funding $ approx.. 135,000.00

What percentage of the above budget is the entity requesting from resort tax? 0 %

PRINCIPLE	ITEM		AMOUNT
Revenue	Private Donor Contributions Total		
	Private Donor Contributions In-kind		
	Public Grants (resort tax request)		20,000
	Fundraising Events		
	Sub Total Revenue		
	Other* (taxes)		115,000
	Total Revenue		
Expenses	Paid Personnel (not including volunteer time)	# FTE Personnel: 0	
	Operations		47,000
	Programming		
	Other*		88,000
	Total Expenses		135,000
Income	Net Income		135,000

***Other Description**: mill levy/ fema

***Other Description**: contracted srvc

Capital Reserves	On Hand Restricted**	0
	On Hand Unrestricted**	0
	Goal	

****Purpose of Restricted and Unrestricted Capital Reserves**: _____

RESORTTAX
— BUILDING BIG SKY SINCE 1992 —

2015-2016 APPLICATION FOR RESORT TAX FUNDS

TOTAL CASH FLOW 3-YEAR REQUIREMENT

(to include all organization projects and programs; not only those requesting funding for in this cycle

ITEM	2015	2016	2017	Total Cash Flow 3-Yr Requirement
Paid Personnel (not including volunteer time)				
# of FTE Personnel	0	0	0	**NA**
Operations	47,000	27,000	27,000	101,000
Programming				
Capital Expenditures				
Other	88,000	91,000	94,000	273,000
Total	135,000	118,000	121,000	374,000

RESORT TAX REQUEST	20,000	0	0	20,000

Describe financial increases and decreases and the projects for which resort tax funds may be requested.

2015 **Requesting a single time expenditure for a turnkey asset for use in the Big Sky Community.**

2016 **No planned Big Sky Resort Tax Board request from Gallatin County Emergency Management.**

2017 **No planned Big Sky Resort Tax Board request from Gallatin County Emergency Management.**

Expenditure Status Report

GALLATIN COUNTY
7/1/2014 through 6/30/2015

2300 PUBLIC SAFETY FUND

254 STATE EMERGENCY & DISASTER PROGRAM

Account Number		Adjusted Appropriation	Expenditures	Year-to-date Expenditures	Year-to-date Encumbrances	Balance	Prct Used
42	PUBLIC SAFETY						
42-06	DISASTER & EMERGENCY SERVICES						
42-06-00	DISASTER & EMERGENCY SERVICES						
42-06-00-200	SUPPLIES						
42-06-00-210	OFFICE SUPPLIES	1,000.00	191.09	191.09	0.00	808.91	19.11
42-06-00-220	OPERATING SUPPLIES	1,900.00	992.19	992.19	0.00	907.81	52.22
42-06-00-221	SOFTWARE	2,589.00	4,956.40	4,956.40	0.00	-2,367.40	191.44
42-06-00-224	FOOD	0.00	52.73	52.73	0.00	-52.73	0.00
42-06-00-226	CLOTHING & UNIFORMS	0.00	0.00	0.00	0.00	0.00	0.00
42-06-00-230	REPAIR & MAINTENANCE SUPPLIES	0.00	169.20	169.20	0.00	-169.20	0.00
42-06-00-231	GAS, OIL, FUEL & GREASE	2,800.00	1,283.51	1,283.51	0.00	1,516.49	45.84
42-06-00-235	EQUIPMENT (NOT OUTLAY)	1,810.00	1,115.99	1,115.99	0.00	694.01	61.66
	Total SUPPLIES	10,099.00	8,761.11	8,761.11	0.00	1,337.89	86.75
42-06-00-300	PURCHASED SERVICES						
42-06-00-312	POSTAGE	0.00	0.00	0.00	0.00	0.00	0.00
42-06-00-315	INTERNET SERVICES	0.00	107.90	107.90	0.00	-107.90	0.00
42-06-00-320	PRINTING AND DUPLICATING	0.00	0.00	0.00	0.00	0.00	0.00
42-06-00-330	SUBSCRIPTIONS & DUES	0.00	0.00	0.00	0.00	0.00	0.00
42-06-00-331	PUBLCTNS OF FORMAL LEGAL NOTIC	100.00	0.00	0.00	0.00	100.00	0.00
42-06-00-335	MEMBERSHIP DUES	200.00	145.00	145.00	0.00	55.00	72.50
42-06-00-337	ADVERTISING	0.00	8.83	8.83	0.00	-8.83	0.00
42-06-00-340	UTILITIES	0.00	821.44	821.44	0.00	-821.44	0.00
42-06-00-341	ELECTRIC UTILITIES	0.00	0.00	0.00	0.00	0.00	0.00
42-06-00-344	GAS UTILITIES	0.00	0.00	0.00	0.00	0.00	0.00
42-06-00-345	TELEPHONE	0.00	253.87	253.87	0.00	-253.87	0.00
42-06-00-346	CELLULAR PHONES	4,000.00	2,557.45	2,557.45	0.00	1,442.55	63.94

2300 PUBLIC SAFETY FUND

254 STATE EMERGENCY & DISASTER PROGRAM

Account Number		Adjusted Appropriation	Expenditures	Year-to-date Expenditures	Year-to-date Encumbrances	Balance	Prct Used
42-06-00-350	PROFESSIONAL SERVICES	0.00	0.00	0.00	0.00	0.00	0.00
42-06-00-360	REPAIR AND MAINTENANCE	500.00	60.00	60.00	0.00	440.00	12.00
42-06-00-361	AUTOMOTIVE REPAIRS & MAINT.	0.00	0.00	0.00	0.00	0.00	0.00
42-06-00-362	OFFICE EQUIP. REPAIR & MAINT.	0.00	1,648.80	1,648.80	0.00	-1,648.80	0.00
42-06-00-363	RADIO & COMMUNICATIONS REPAIR & MAINT.	1,000.00	0.00	0.00	0.00	1,000.00	0.00
42-06-00-366	BUILDING MAINTENANCE ALLOCATION	0.00	146.25	146.25	0.00	-146.25	0.00
42-06-00-370	TRAVEL	2,000.00	1,991.95	1,991.95	0.00	8.05	99.60
42-06-00-380	TRAINING	1,000.00	30.12	30.12	0.00	969.88	3.01
42-06-00-390	PURCHASED OR CONTRACTED SERVICES	86,042.00	64,531.50	64,531.50	0.00	21,510.50	75.00
Total	PURCHASED SERVICES	94,842.00	72,303.11	72,303.11	0.00	22,538.89	76.24
42-06-00-500	FIXED CHARGES						
42-06-00-513	LIABILITY INSURANCE ALLOCATED	2,837.00	3,030.71	3,030.71	0.00	-193.71	106.83
42-06-00-530	RENT	2,500.00	2,500.00	2,500.00	0.00	0.00	100.00
42-06-00-590	ADMINISTRATIVE FIXED COSTS	0.00	0.00	0.00	0.00	0.00	0.00
Total	FIXED CHARGES	5,337.00	5,530.71	5,530.71	0.00	-193.71	103.63
42-06-00-600	DEBT SERVICE						
42-06-00-630	SERVICE CHARGES	0.00	26.12	26.12	0.00	-26.12	0.00
Total	DEBT SERVICE	0.00	26.12	26.12	0.00	-26.12	0.00
42-06-00-800	OTHER OBJECTS						
42-06-00-820	TRANSFER TO OTHER FUNDS	0.00	0.00	0.00	0.00	0.00	0.00
Total	OTHER OBJECTS	0.00	0.00	0.00	0.00	0.00	0.00
42-06-00-900	CAPITAL OUTLAY						
42-06-00-915	INTANGIBLES	5,000.00	0.00	0.00	0.00	5,000.00	0.00
42-06-00-920	BUILDINGS	0.00	0.00	0.00	0.00	0.00	0.00
42-06-00-930	IMPROVEMENTS OTHER THAN BLDGS	0.00	0.00	0.00	0.00	0.00	0.00
42-06-00-940	CAPITAL EXP. - MACHINERY & EQUIP.	0.00	0.00	0.00	0.00	0.00	0.00
Total	CAPITAL OUTLAY	5,000.00	0.00	0.00	0.00	5,000.00	0.00

Expenditure Status Report

GALLATIN COUNTY
7/1/2014 through 6/30/2015

2300 PUBLIC SAFETY FUND

254 STATE EMERGENCY & DISASTER PROGRAM

Account Number	Adjusted Appropriation	Expenditures	Year-to-date Expenditures	Year-to-date Encumbrances	Balance	Prct Used
Total DISASTER & EMERGENCY SERVICES	115,278.00	86,621.05	86,621.05	0.00	28,656.95	75.14
42-06-21 *** Title Not Found ***						
42-06-21-900 CAPITAL OUTLAY						
42-06-21-940 MACHINERY & EQUIPMENT	0.00	0.00	0.00	0.00	0.00	0.00
Total *** Title Not Found ***	0.00	0.00	0.00	0.00	0.00	0.00
42-06-25 *** Title Not Found ***						
42-06-25-900 CAPITAL OUTLAY						
42-06-25-940 MACHINERY & EQUIPMENT	0.00	0.00	0.00	0.00	0.00	0.00
Total *** Title Not Found ***	0.00	0.00	0.00	0.00	0.00	0.00
42-06-50 03 EXERCISE GRANT						
42-06-50-900 CAPITAL OUTLAY						
42-06-50-940 MACHINERY & EQUIPMENT 03 EXERCISE	0.00	0.00	0.00	0.00	0.00	0.00
Total 03 EXERCISE GRANT	0.00	0.00	0.00	0.00	0.00	0.00
Total PUBLIC SAFETY FUND	115,278.00	86,621.05	86,621.05	0.00	28,656.95	75.14
Grand Total	115,278.00	86,621.05	86,621.05	0.00	28,656.95	75.14

Expenditure Status Report

GALLATIN COUNTY
7/1/2013 through 6/30/2014

2300 PUBLIC SAFETY FUND

254 STATE EMERGENCY & DISASTER PROGRAM

Account Number		Adjusted Appropriation	Expenditures	Year-to-date Expenditures	Year-to-date Encumbrances	Balance	Prct Used
42	PUBLIC SAFETY						
42-06	DISASTER & EMERGENCY SERVICES						
42-06-00	DISASTER & EMERGENCY SERVICES						
42-06-00-200	SUPPLIES						
42-06-00-210	OFFICE SUPPLIES	1,000.00	322.55	322.55	0.00	677.45	32.26
42-06-00-220	OPERATING SUPPLIES	1,900.00	1,020.60	1,020.60	0.00	879.40	53.72
42-06-00-221	SOFTWARE	0.00	2,539.00	2,539.00	0.00	-2,539.00	0.00
42-06-00-224	FOOD	0.00	380.00	380.00	0.00	-380.00	0.00
42-06-00-226	CLOTHING & UNIFORMS	0.00	0.00	0.00	0.00	0.00	0.00
42-06-00-230	REPAIR & MAINTENANCE SUPPLIES	0.00	166.97	166.97	0.00	-166.97	0.00
42-06-00-231	GAS, OIL, FUEL & GREASE	2,800.00	2,695.55	2,695.55	0.00	104.45	96.27
42-06-00-235	EQUIPMENT (NOT OUTLAY)	1,810.00	256.54	256.54	0.00	1,553.46	14.17
	Total SUPPLIES	7,510.00	7,381.21	7,381.21	0.00	128.79	98.29
42-06-00-300	PURCHASED SERVICES						
42-06-00-312	POSTAGE	0.00	22.18	22.18	0.00	-22.18	0.00
42-06-00-315	INTERNET SERVICES	0.00	1,102.42	1,102.42	0.00	-1,102.42	0.00
42-06-00-320	PRINTING AND DUPLICATING	0.00	0.00	0.00	0.00	0.00	0.00
42-06-00-330	SUBSCRIPTIONS & DUES	0.00	300.00	300.00	0.00	-300.00	0.00
42-06-00-331	PUBLCTNS OF FORMAL LEGAL NOTIC	100.00	0.00	0.00	0.00	100.00	0.00
42-06-00-335	MEMBERSHIP DUES	200.00	145.00	145.00	0.00	55.00	72.50
42-06-00-337	ADVERTISING	0.00	0.00	0.00	0.00	0.00	0.00
42-06-00-340	UTILITIES	0.00	1,103.67	1,103.67	0.00	-1,103.67	0.00
42-06-00-341	ELECTRIC UTILITIES	0.00	0.00	0.00	0.00	0.00	0.00
42-06-00-344	GAS UTILITIES	0.00	0.00	0.00	0.00	0.00	0.00
42-06-00-345	TELEPHONE	200.00	0.00	0.00	0.00	200.00	0.00
42-06-00-346	CELLULAR PHONES	4,000.00	5,072.01	5,072.01	0.00	-1,072.01	126.80

2300 PUBLIC SAFETY FUND

254 STATE EMERGENCY & DISASTER PROGRAM

Account Number		Adjusted Appropriation	Expenditures	Year-to-date Expenditures	Year-to-date Encumbrances	Balance	Prct Used
42-06-00-350	PROFESSIONAL SERVICES	0.00	0.00	0.00	0.00	0.00	0.00
42-06-00-360	REPAIR AND MAINTENANCE	500.00	385.00	385.00	0.00	115.00	77.00
42-06-00-361	AUTOMOTIVE REPAIRS & MAINT.	0.00	11.50	11.50	0.00	-11.50	0.00
42-06-00-362	OFFICE EQUIP. REPAIR & MAINT.	0.00	599.88	599.88	0.00	-599.88	0.00
42-06-00-363	RADIO & COMMUNICATIONS REPAIR & MAINT.	1,000.00	606.00	606.00	0.00	394.00	60.60
42-06-00-366	BUILDING MAINTENANCE ALLOCATION	0.00	0.00	0.00	0.00	0.00	0.00
42-06-00-370	TRAVEL	2,000.00	1,351.43	1,351.43	0.00	648.57	67.57
42-06-00-380	TRAINING	1,000.00	169.00	169.00	0.00	831.00	16.90
42-06-00-390	PURCHASED OR CONTRACTED SERVICES	75,500.00	75,500.01	75,500.01	0.00	-0.01	100.00
	Total PURCHASED SERVICES	84,500.00	86,368.10	86,368.10	0.00	-1,868.10	102.21
42-06-00-500	FIXED CHARGES						
42-06-00-513	LIABILITY INSURANCE ALLOCATED	2,837.00	2,758.11	2,758.11	0.00	78.89	97.22
42-06-00-530	RENT	2,500.00	2,500.00	2,500.00	0.00	0.00	100.00
42-06-00-590	ADMINISTRATIVE FIXED COSTS	0.00	4,798.55	4,798.55	0.00	-4,798.55	0.00
	Total FIXED CHARGES	5,337.00	10,056.66	10,056.66	0.00	-4,719.66	188.43
42-06-00-600	DEBT SERVICE						
42-06-00-630	SERVICE CHARGES	0.00	15.51	15.51	0.00	-15.51	0.00
	Total DEBT SERVICE	0.00	15.51	15.51	0.00	-15.51	0.00
42-06-00-800	OTHER OBJECTS						
42-06-00-820	TRANSFER TO OTHER FUNDS	0.00	0.00	0.00	0.00	0.00	0.00
	Total OTHER OBJECTS	0.00	0.00	0.00	0.00	0.00	0.00
42-06-00-900	CAPITAL OUTLAY						
42-06-00-920	BUILDINGS	9,579.00	252.00	252.00	0.00	9,327.00	2.63
42-06-00-930	IMPROVEMENTS OTHER THAN BLDGS	0.00	0.00	0.00	0.00	0.00	0.00
42-06-00-940	CAPITAL EXP. - MACHINERY & EQUIP.	0.00	0.00	0.00	0.00	0.00	0.00
	Total CAPITAL OUTLAY	9,579.00	252.00	252.00	0.00	9,327.00	2.63
	Total DISASTER & EMERGENCY SERVICES	106,926.00	104,073.48	104,073.48	0.00	2,852.52	97.33

Expenditure Status Report

GALLATIN COUNTY
7/1/2013 through 6/30/2014

2300 PUBLIC SAFETY FUND

254 STATE EMERGENCY & DISASTER PROGRAM

Account Number	Adjusted Appropriation	Expenditures	Year-to-date Expenditures	Year-to-date Encumbrances	Balance	Prct Used
42-06-21 *** Title Not Found ***						
42-06-21-900 CAPITAL OUTLAY						
42-06-21-940 MACHINERY & EQUIPMENT	0.00	0.00	0.00	0.00	0.00	0.00
Total *** Title Not Found ***	0.00	0.00	0.00	0.00	0.00	0.00
42-06-25 *** Title Not Found ***						
42-06-25-900 CAPITAL OUTLAY						
42-06-25-940 MACHINERY & EQUIPMENT	0.00	0.00	0.00	0.00	0.00	0.00
Total *** Title Not Found ***	0.00	0.00	0.00	0.00	0.00	0.00
42-06-50 03 EXERCISE GRANT						
42-06-50-900 CAPITAL OUTLAY						
42-06-50-940 MACHINERY & EQUIPMENT 03 EXERCISE	0.00	0.00	0.00	0.00	0.00	0.00
Total 03 EXERCISE GRANT	0.00	0.00	0.00	0.00	0.00	0.00
Total PUBLIC SAFETY FUND	106,926.00	104,073.48	104,073.48	0.00	2,852.52	97.33
Grand Total	106,926.00	104,073.48	104,073.48	0.00	2,852.52	97.33

Gallatin County Emergency Management

Service Area

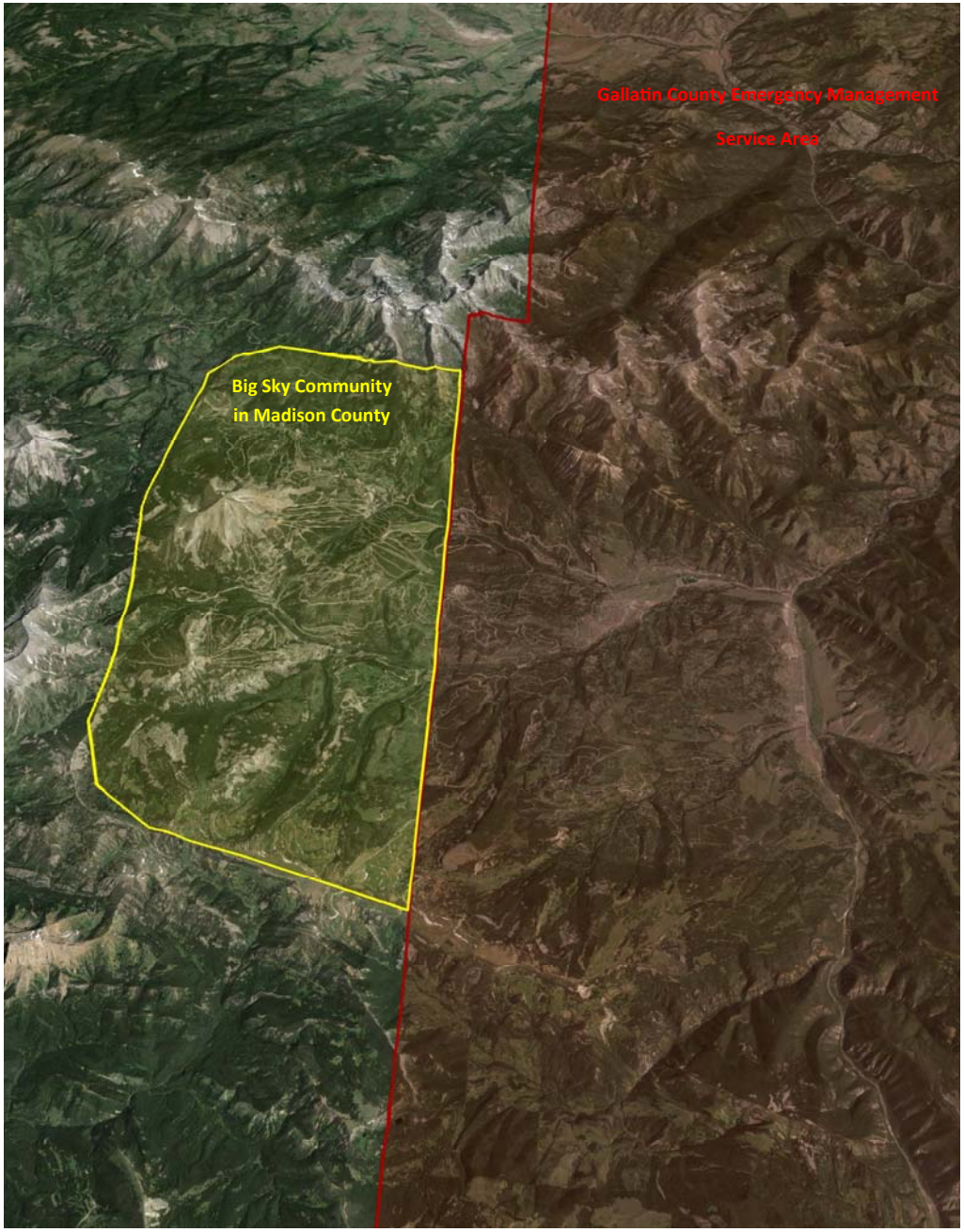

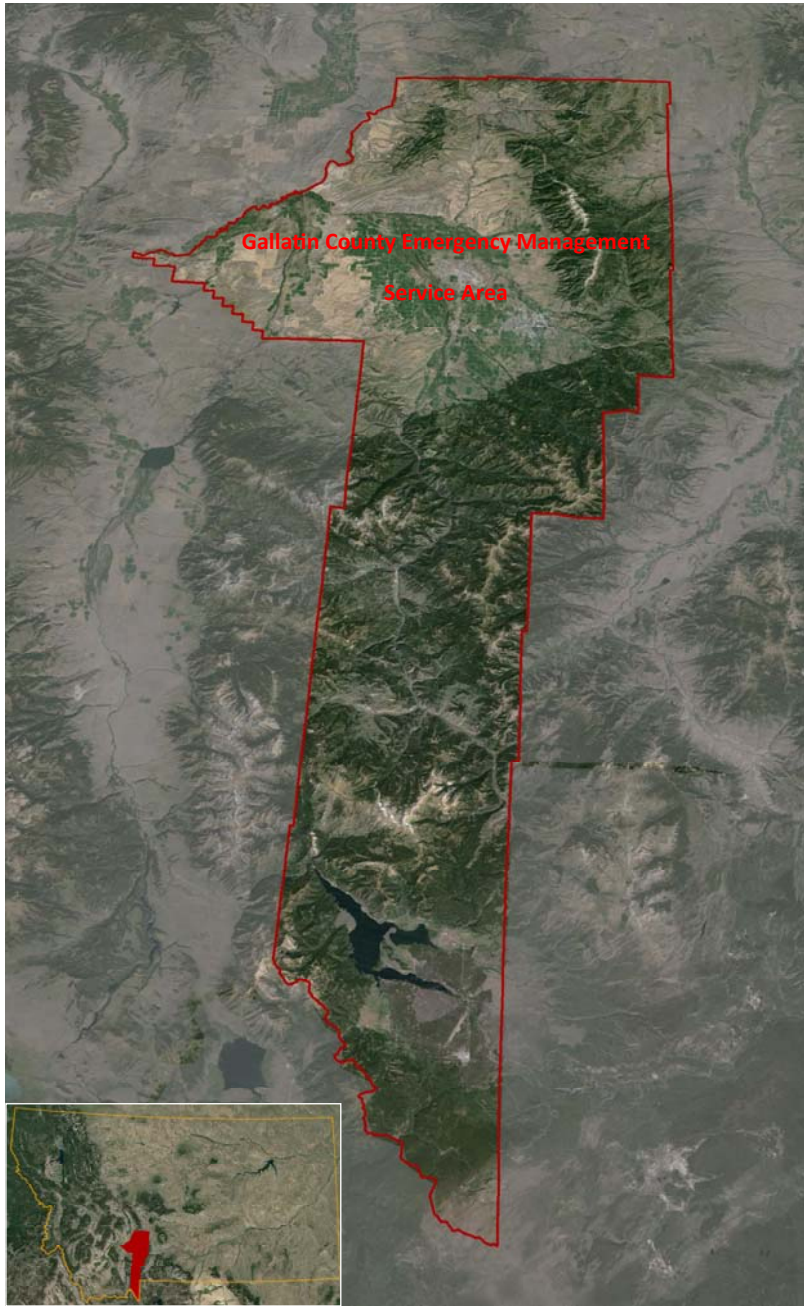

Variable Message Signs
Full-Matrix and Three-Line

WANCO® Driving traffic safety.

800-972-0755
www.wanco.com

The safest means for notifying motorists of changes in traffic patterns and road conditions.

- Onboard controller
- Easiest programming in the industry
- Solar charging
- Low power consumption and more uptime
- Meets MUTCD and is NTCIP-compliant

Wanco Variable Message Signs are the ideal choice when you need to get information to the public. Full-size and mini-size signs provide versatility with the same great performance.

Full-matrix signs provide the greatest flexibility for displaying any type of message—large or small letters, symbols, graphics. Graphics and text can be combined in the same message.

Wanco three-line message signs are capable of displaying three rows of alphanumeric characters. The ultra-bright, highly legible LEDs display your message clearly.

Unsurpassed quality, engineering and value, paired with a multitude of functions and options, make these signs perfect for a wide variety of applications.

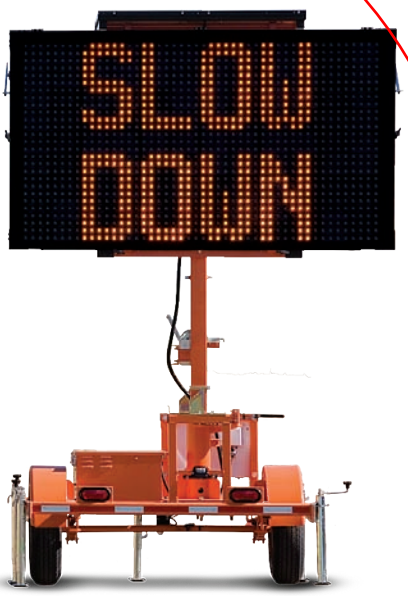

Mini Matrix Sign

WVTM(A) Hydraulic lift
WVTM(B) Manual winch

Full-Matrix Sign

(shown on front cover)

WTMMB(A) Hydraulic lift
WTMMB(B) Manual winch

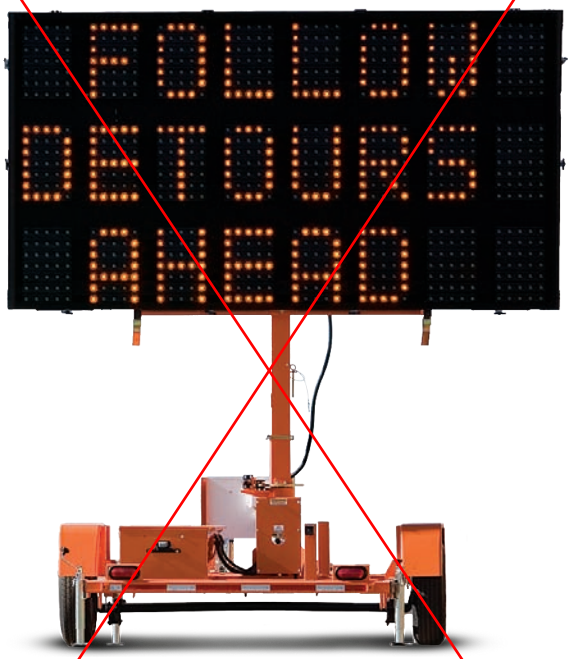

Three-Line Sign

WTLMB(A) Hydraulic lift
WTLMB(B) Manual winch

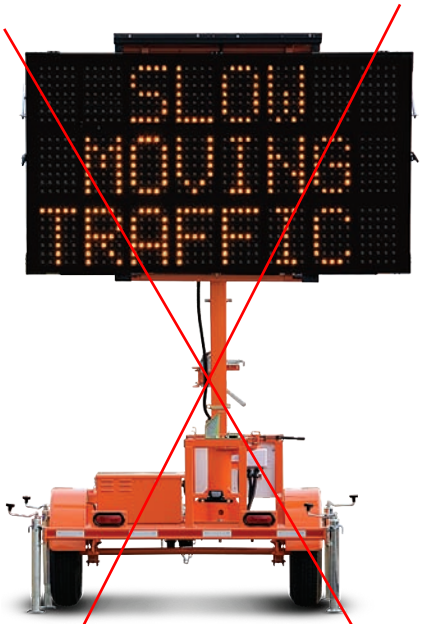

Mini Three-Line Sign

WVT3(A) Hydraulic lift
WVT3(B) Manual winch

Signs are also available in truck-mount versions. Optional accessories include radar-based speed detection, Traffic Data Classifier System, cellular modem for remote communications, GPS and more. For details, visit **www.wanco.com**.

Rubber vibration-isolation mounts

Rubber vibration mounts decrease physical shock to the LED display modules and isolate them from chassis ground. This mounting technique prolongs the life of the modules, increasing both reliability and uptime.

The face of the sign cabinet is covered by an impact-resistant clear polycarbonate resin thermoplastic door that further protects the modules. The door is angled to reduce glare.

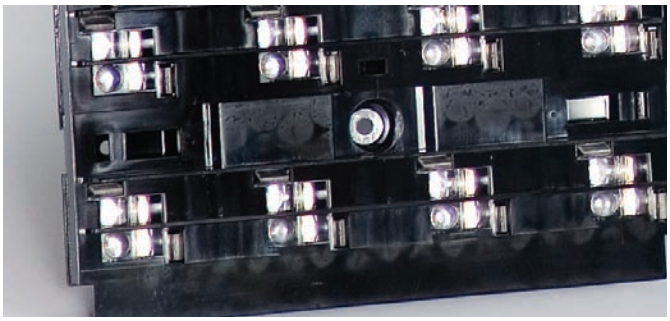

LED pixels

Display modules feature clusters of four LEDs that comprise each "pixel." An optical lens magnifies the intensity of the LEDs and increases angularity. A visor shades each row of pixels from sunlight, maximizing brightness.

All Wanco display modules feature 5-mil silicone conformal coating, which provides long-term protection against moisture and other atmospheric contaminants.

Wanco matrix signs provide a variety of font sizes and styles—many more than are shown here—as well as standard and custom symbols and graphics.

Wanco portable message signs have a self-contained onboard computer, making a laptop or external controller unnecessary.

Changing the message is simple, as Wanco signs feature the easiest programming in the industry. The control console includes an LCD display and quick-reference instructions for many common commands.

Signs come configured with preprogrammed standard messages. A quick-message function provides for display of select messages with a keystroke. Multiple programming options provide flexibility for multiple applications.

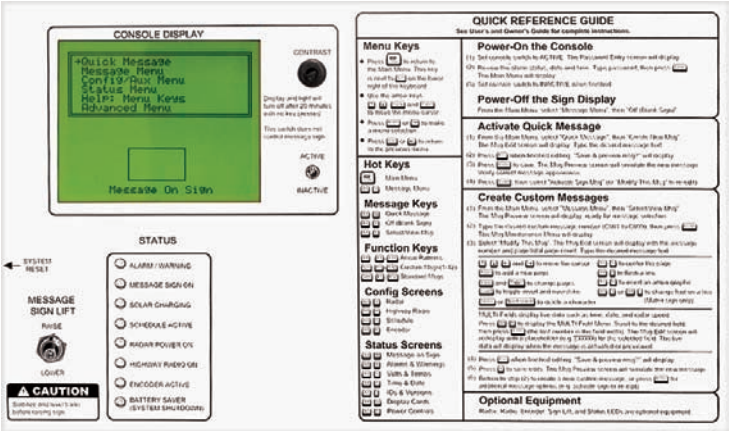

Matrix sign control panel

Unauthorized access to the control console is virtually eliminated with multi-level password protection, a removable keyboard, and a locking control box that resists tampering.

Brief specifications

Full-size signs

Physical

Dimensions in inches (cm)

Travel position

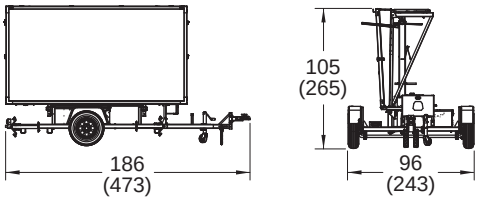

Deployed

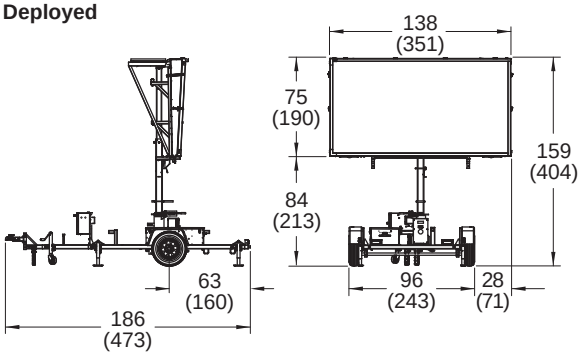

Weight	Approx. 2640 lbs. (1193 kg)
Tires	ST205/75 D15

Mini signs

Physical

Dimensions in inches (cm)

Travel position

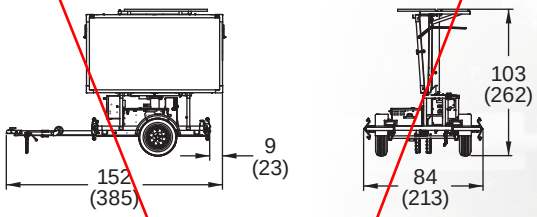

Deployed

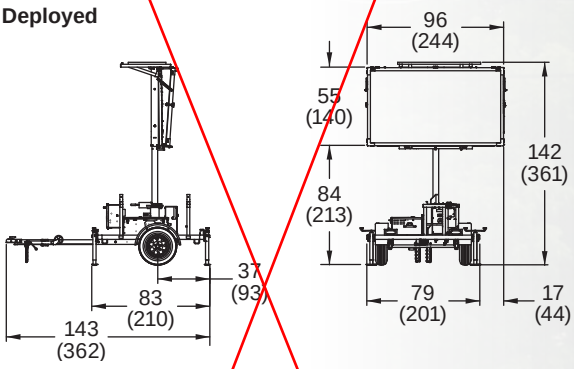

Weight	Approx. 1580 lbs. (717 kg)
Tires	ST205/75 D15

Matrix Signs

Display

Resolution	Four amber LEDs form each pixel	
Matrix	48 pixels wide, 27 pixels high	
Fonts	12 fonts, selectable	
Default font	5 x 7 pixels 3 lines of 8 characters max.	
Default font size	Full-size	11 x 16 in. (28 x 42 cm)
	Mini	8 x 12 in. (21 x 30 cm)

Power

Batteries	Four 6 Vdc deep-cycle Group 24 batteries, wired for 12 Vdc power	
Battery capacity	430 Ah total capacity @ 12 Vdc	
Solar panels	Full-size	130 W
	Mini	85 W
Power options	Additional batteries and solar panels 4D AGM batteries	

Three-Line Signs

Display

Resolution	Four amber LEDs form each pixel	
Font	1 font 5 x 7 pixels 3 lines of 8 characters per line max.	
Font size	Full-size	12 x 18 in. (30 x 45 cm)
	Mini	9 x 14 (24 x 34 cm)

Power

Batteries	Four 6 Vdc deep-cycle Group 24 batteries, wired for 12 Vdc power	
Battery capacity	430 Ah total capacity @ 12 Vdc	
Solar panels	Full-size	130 W
	Mini	85 W
Power options	Additional batteries and solar panels 4D AGM batteries	

Due to Wanco's commitment to continuous improvement of our products, all information is subject to change without notice. Wanco and the Wanco logo are registered trademarks of Wanco Inc. All other trademarks are property of their respective owners.

WANCO INC.
5870 Tennyson Street
Arvada, Colorado 80003
800-972-0755
303-427-5700
303-427-5725 fax
www.wanco.com

Printed on recycled paper

©2013 Wanco Inc. All rights reserved. Printed in the USA. | WPB0016 December 2013

Article on current am radio transmitters

Information Station Specialists

www.theRADIOsource.com

Founded in 1983, Information Station Specialists is the nation's best known source for Information Radio Stations (TIS/HAR), advisory signs & the specialized services required to transmit spoken messages to citizens – the only such source providing products entirely made in America.

Case Study: Gallatin County, Montana

2003

Portable Stations to Inform Citizens During Flood

Snowmelt run-off from a dramatic jump in temperature triggered flash floods across the Gallatin River Valley this Spring, washing out numerous dirt roads and bridges common to the area. Citizens suddenly found pathways to homes, businesses and recreation areas impassable due to mud slides and trapped, deep, standing water. It was so bad, in fact, that in March 2003 county officials had to declare a state of emergency. This case study imparts why the County decided to add Portable Advisory AM Radio Stations to its extensive emergency communications arsenal.

Gallatin County, Montana, lies right at the heart of the Rocky Mountains at the northern-most tip of Yellowstone National Park. Unusually large, the County covers more than 2,500 square miles and boasts being "the most populated and fastest growing county in scenic southwest Montana." It's pretty easy to understand why. Snow-capped mountains, clear streams, national parks and preserves cover this stunning rural wilderness setting, drawing over 100,000 people (locals and tourists) on any given day.

Emergency manager Jason Shrauger of the Gallatin County/City of Bozeman OEM takes this responsibility seriously. To ensure his vast domain is covered, he recently added three RoadRunnR Portable Advisory Radio Systems to Gallatin County's emergency program. Each fire-engine red unit is set up with two frequencies (1600 and 1700 kHz) and automatic, targeted NOAA EAS/weather radio programming. This means that when Gallatin or adjacent Madison County receive NOAA alerts for their areas, Portable Advisory Stations automatically transmit the broadcasts to AM radio receivers in a three-to-five-mile radius. That's 28 to 78 square miles. These radio trailers are the first in the nation to carry NOAA Specific Area Message Encoding that targets broadcasts geographically.

In contrast to the fixed Emergency AM Advisory Radio Stations that cities and towns usually employ, Portable Emergency Stations are often the communication tool of choice for larger jurisdictions (such as counties, states and the military), because Portable Stations can be quickly deployed to affected areas during highway incidents, evacuations, etc. For example, Palm Beach County in Florida has used portable stations to assist with hurricane emergencies for years; the State of South Dakota uses portable stations for fire evacuations; Umatilla Army Depot in Washington deploys them in relation to chemical weapons destruction projects. Shrauger plans to use Gallatin's RoadRunnRs primarily for weather-related events and forest fires. See why, below, in his words:

What problem were you trying to solve and what do you see as the overall result?
Shrauger: "We had severe flooding in several areas within the County over a series of several days. The task at hand was to notify as many of the customers in those areas of road closures, damaged roads and basic water safety reminders. We did this using local print, TV and radio media as well as our web page, recorded message line, and the HARPS [Highway Advisory Radio Portable System]. Overall, we were successful in this event."

How were the emergency stations positioned with respect to the flooding and to each other?
Shrauger: "They were placed in the immediate area of the road closures or bridge outages to be used to notify the public of alternate routes;..."

What were they telling listeners to do?
Shrauger: "They were telling listeners to use alternate routes, use caution when traveling a list of specific roads, other sources of info on the floods (web page, recorded info line, etc.) and also had some specific safety information (don't drive through water, etc.)."

Were both frequencies used and, if so, why?
Shrauger: "Both frequencies were used, because we had two separate areas affected with a need to put different info up for each location. The locations were too close to each other to put both on the same frequency due to overlap."

How will the system be used in the future, and how is the public made aware of the station?
Shrauger: "These radios have been used to mitigate the damages to roads during flooding events, used to get NOAA messages to point-specific locations that normally did not receive NOAA broadcasts and will be used in the future for evacuations, road closures, specific emergent and non-emergent events to help us keep in contact with our customers. We have several tools available to us for notifying the general public, EAS, emergency email, web sites, recorded phone messages, door to door, local print, voice, and

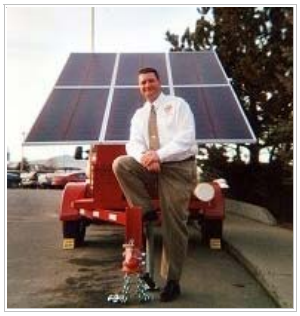

Emergency Manager Jason Shrauger poses with one of the County's 5 RoadRunnR portable emergency advisory radio stations. RoadRunnRs have now been upgraded with changeable message signs and are called VoiceStar Advisory Radio Stations.

Gallatin County uses matching red pickups to transport their portable stations.

television media just to name a few. These three Portable Advisory Radio Stations give us the opportunity to pre-position another tool for use whenever the time arises."

Gallatin County's Emergency Advisory Radio System in action.

How was funding for the system arranged?
Shrauger: "Gallatin County Emergency Management was the recipient of a FEMA Project Impact Grant. We were able to use funds for this grant to implement mitigation projects."

Why did you decide to get a portable emergency advisory radio system?
Shrauger: "Gallatin County Emergency Management was looking for another way to notify our customers in the event of an emergency. We were aware of the local 530 AM highway advisory systems and decided to take a look at a similar system to meet our needs. Once we got in contact with Information Station Specialists the decision was easy. Some of the key decision-making features were . . .

- The ability to choose from three different power sources [the units are powered by 6 unbreakable solar panels, a ten-day operational battery backup system or AC power plug-in].
- The ability to update messages three different ways [cellphone, landline and locally].
- The fact that we have a choice of two different frequencies.
- And also the ability to add NOAA weather radio to the system.

"The customer service that we have received throughout the process has been exceptional. All of our questions have been answered in a timely manner, and any changes that we wanted to make were considered. Information Station Specialists has great customer service, helpful staff, quick delivery times, ability to customize (HARPS look good in red), interested in the customers perspective to help improve future versions of the product, great training on use of radios, attention to detail (the labels on the wires, signs on the fenders)." [Information Station Specialists provided advance shipment. licensing and on-site demonstration of one unit at a Montana Association of Counties meeting; and Information Station Specialists owner Bill Baker appeared on local television, explaining how the system works to people in the community.]

What advice do you have for emergency managers who consider such a system?
Shrauger: "Get as many as you can, as soon as you can. If great customer service and an excellent product are key to your organizational values, strongly consider Information Station Specialists as a potential vender for these pieces of equipment."

Related Links

- **Today's Portable Emergency Advisory Radio Systems.**
- **Other Case Studies.**

© 1983-2015 • Information Station Specialists, Inc. • All Rights Reserved
PO Box 51, Zeeland, Michigan, USA, 49464-0051, Phone 616.772.2300, Fax 616.772.2966, Email Us

• • •

Information Radio Stations is a generic term synonymous with Travelers Information Stations (TIS), Highway Advisory Radio Stations (HAR) / Highway Information Systems & Low Power Radio Stations (LPR). Operation of the stations is governed by FCC Part 90.242 Rules. A FCC license is required. Information Radio Stations may be fixed or portable. Subcomponents may include transmitter, antenna and ground system, digital voice player, wattmeter, cabinet with conventional or Corbin locks, lightning arrestors for RF, power and telephone lines, coaxial cable. Most stations employ black maximized antennas to discourage ice accumulation and security measures to prevent unauthorized program access. Options include synchronization, battery backup, solar power, remote programming by local, network or telco, multi-station audio distribution via RF or LAN / WAN or wireless network.

Limitations.